LIQUID FILTRATION SYSTEMS

Rosedale® DF Series

ROSEDALE®
PRODUCTS INC.

Separation, Filtration, & Purification Technology.™

Rosedale® DF Series

The Rosedale® DF Series Filter Bags have up to 4X the dirt holding capacity of standard bags at the equivalent micron ratings. Rosedale® DF Series bags are easy to install and remove, and require less room in storage and disposal. Because the dirt is caught inside the bag, contaminant wash off downstream associated with exterior surface loading filter cartridges is avoided. Rosedale® DF Series bags produce excellent results when used as a pre-filter for membrane filtration and other fine filters.

SPECIFICATIONS

- Available in #1 and #2 sizes
- Removal Ratings (microns):
  1, 5, 10, 25, 50, 100, 200 Nominal
- Maximum Operating Temperature:
  Polypropylene 180°F / 82°C
  Polyester 300°F / 140°C
- Maximum Differential Pressure:
  35 psid @ 68°F (1.03 bar @ 20°C)
- Recommended Change-Out Differential Pressure:
  20 psid @ 68°F (.83 bar @ 20°C)
- Maximum Flow Rate:
  75 gpm (#1 size) or 150 gpm (#2 size)
- Recommended Flow Rate:
  40 gpm (#1 size) or 80 gpm (#2 size)
- 60% more media compared to standard bags (reduced hold-up volume which minimizes product waste and waste management fees)
- Rosedale® DF Series bags lasts up to 4X longer than standard bags
- Rosedale® DF Series bags fit in single and multi-bag filter housings (contact us for all options)

APPLICATIONS

- Inks, paints, and coatings
- General chemicals (broad chemical compatibility)
- Oil and gas
- Electronics
- Lubricants
- Food and beverages
- Water treament

CONSTRUCTION

- All welded construction for high efficiency
- Thermal finish on media to eliminate fiber shredding
- All component materials of the Rosedale® DF Series polypropylene (POG) bags are compliant with the FDA CFR Title 21, Section 177.1520

TYPE	SURFACE AREA	VOLUME	SIZE
DF #1	≈3.5 FT	≈.7 GAL.	7" X 14.25"
DF #2	≈7.0 FT2	≈1.4 GAL.	7" X 25.5"
STD. #1	≈2.2 FT2	≈2.25 GAL.	7" X 16.5"
STD. #2	≈4.4 FT2	≈4.5 GAL.	7" X 32"

Note:
Variables such as solids amounts, type, micron retention, viscosity, and other process information should be considered to filter sizing. Consult factory.

Speak with a product representative today.

800.821.5373

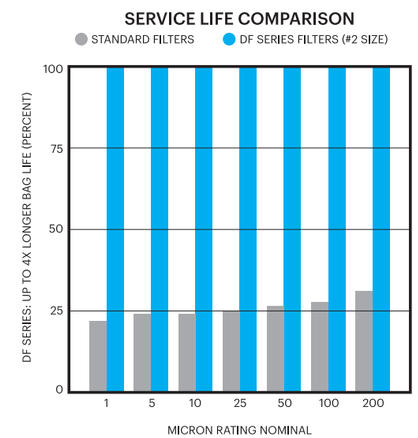

Rosedale® DF Series Bags

Rosedale® DF Series bags consist of two tubular layers that are combined together with thermal and ultrasonic welding. Each filter layer utilizes a gradient density design, enhancing flow rate, solids loading, and efficiency. The downstream side of the filter layers are glazed or singed to prevent fiber migration. The molded DF bag flange comes in Polypropylene and Polyester and ensures a positive seal with the filter housing. Closed "R" Cap styles fit Rosedale 8-30, NCO8-30 and Multi-Bag Series vessels. Open "C" Cap Styles fit Rosedale DF8-30 Series vessels.

Filter Bags: How to Order.

CONFIGURE YOUR PART NUMBER (EXAMPLE: RDF-10-PES-1-R)

A	B	C	D	E
BAG TYPE	MICRON RATING	FILTER MATERIAL	BAG LENGTH	TOP STYLE

A	ROSEDALE® DF SERIES	CODE
	GRADIENT DENSITY	RDF

B	MICRON RATING NOMINAL	CODE
	1 MICRON	1
	5 MICRON	5
	10 MICRON	10
	25 MICRON	25
	50 MICRON	50
	100 MICRON*	100
	200 MICRON*	200

*Available in single layer material only.

C	FILTER MATERIAL	CODE
	POLYESTER	PES
	POLYPROPYLENE	POG

D	BAG LENGTH	CODE
	7" X 14.5" NOMINAL	1
	7" X 27.5" NOMINAL	2

E	BAG TOP STYLE	CODE
	CLOSED (STANDARD)	R
	OPEN	C

Speak with a product representative today.

800.821.5373

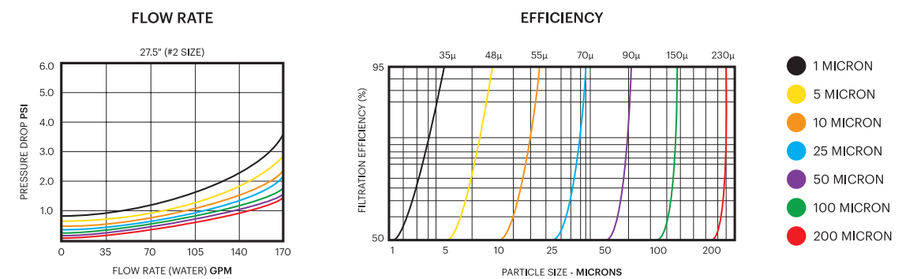

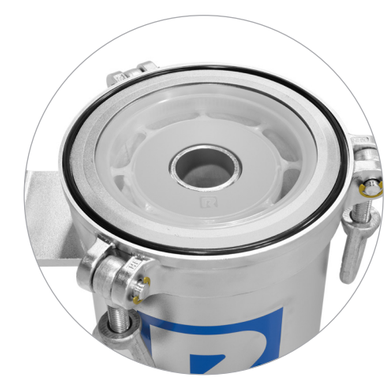

Rosedale® Model 8/NCO 8

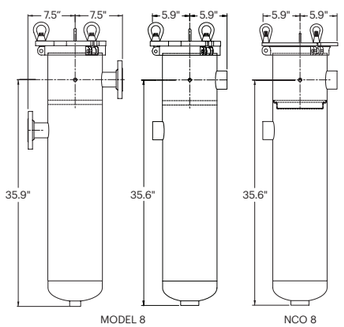

Filter: How to Order.

CONFIGURE YOUR PART NUMBER (EXAMPLE: 8-30-2F-2-300-S-B-DF-C)

A	B	C	D	E	F	G	H	I
HOUSING	ELEMENT LENGTH	PIPE SIZE	OUTLET STYLE	PRESSURE RATING	HOUSING MATERIAL	GASKET MATERIAL	BASKET MATERIAL	ASME CODE

A	HOUSING	CODE
	MODEL 8	8
	NCO 8	NCO8

B	ELEMENT LENGTH	CODE
	14.25"	15
	27.5"	30

C	PIPE SIZE, FLANGED	CODE
	MODEL 8	2F
	NCO 8	2P

D	OUTLET STYLE	CODE
	8-30	*/2
	NCO 8	*

E	PRESSURE RATING	CODE
	150 PSI	150
	300 PSI (MODEL 8 ONLY)	300

F	HOUSING MATERIAL	CODE
	304 STAINLESS STEEL	S
	316 STAINLESS STEEL (MODEL 8 ONLY)	S316

G	GASKET MATERIAL	CODE
	BUNA N	B
	EPR	E
	FLUOROELASTOMER	V

H	BASKET STRAINER	CODE
	316 STAINLESS STEEL	DF

I	ASME CODE OPTION	CODE
	ASME CODE STAMP (MODEL 8 ONLY)	C

Speak with a product representative today.

800.821.5373

Note: Consult factory for other customized options.

Rosedale® DF Series

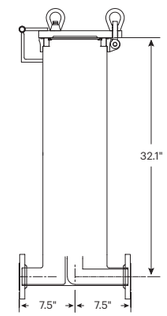

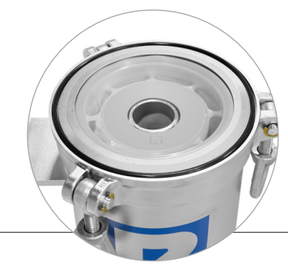

Filter: How to Order.

CONFIGURE YOUR PART NUMBER (EXAMPLE: DF8-30-2F-IL-150-S-B-DF-C)

A	B	C	D	E	F	G	H	I
HOUSING	ELEMENT LENGTH	PIPE SIZE	OUTLET STYLE	PRESSURE RATING	HOUSING MATERIAL	GASKET MATERIAL	BASKET MATERIAL	ASME CODE

A	HOUSING	CODE
	DF	DF8

B	ELEMENT LENGTH	CODE
	14.25"	15
	27.5"	30

C	PIPE SIZE, FLANGED	CODE
	MODEL 8	2F

D	OUTLET STYLE	CODE
	INLINE	IL

E	PRESSURE RATING	CODE
	150 PSI	150
	300 PSI	300

F	HOUSING MATERIAL	CODE
	304 STAINLESS STEEL	S
	316 STAINLESS STEEL	S316

G	GASKET MATERIAL	CODE
	BUNA N	B
	EPR	E
	FLUOROELASTOMER	V

H	BASKET STRAINER	CODE
	316 STAINLESS STEEL	DF

I	ASME CODE OPTION	CODE
	ASME CODE STAMP	C

Note: Consult factory for other customized options.

Accessories

Rosedale® DF Series
Bag Insertion Tool
Item#: 9-22111
Part#: DF BAG INSERT TOOL AL

Rosedale® DF Series
Bag Removal Tool
Item#: 9-22110
Part# DF BAG REMOVAL TOOL AL

Rosedale® DF Series
Bag Hold Down Spring
Item# 8-7201
Part# 8HDS NEW STYLE (LONG) 316 SS

Rosedale® DF 900 Series Basket
Item #: B-21192-W (#1 Standard Duo)
Part # 915-DF BASKET 316 ALL-WE
Item #: B-21191-W (#2 Standard Duo)
Part # 930-DF BASKET 316 ALL-WE

Rosedale® DF 700 Series Basket (with handle)
Item #: B-21194-W (#1 Rosedale® 715 Duo)
Part # 715-DF BASKET 316 ALL-WE
Item #: B-21193-W (#2 Rosedale® 730 Duo)
Part # 730-DF BASKET 316 ALL-WE

Speak with a product representative today.

800.821.5373

Custom Design

We can build anything from simple modifications on standard housings to customer-specified skid-mounted filtration systems. These can incorporate filters, strainers, separators, controllers, sensors, and automated operations.

Rosedale has a long history of innovative filtration designs. They are as simple as our Model 4 housing or as complex as our multistation automatic backwashing filtration systems. Using our expertise, we work with our clients to manufacture systems that meet their needs. Some of our standard models started out as solutions to a client's need, such as the duplex and multiplex filters or convertible housings.

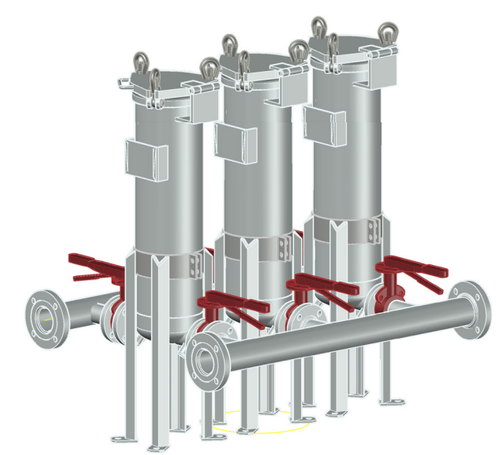

Welcome to the future of liquid filtration technology.

ROSEDALE® PRODUCTS INC.

Separation, Filtration, & Purification Technology.™

50 YEAR ANNIVERSARY 1972–2022

Rosedale Products, Inc. is a leading technology developer in the field of liquid filtration systems and waste minimization products for customers around the world. With more than 50 years of experience, Rosedale offers an exceptional product line that includes high-performance filtration solutions for multiple industries. Rosedale technicians help customers find the best, most cost-effective approaches to their filtration needs.

Rosedale's product line sets the industry standard in versatility and reliability and includes bag and cartridge filters, basket strainers, automatic back washing filters, filter cartridges, and many special application products. Together with ongoing consulting, troubleshooting, and support from our team of in-house experts, Rosedale provides comprehensive solutions for every critical industry filtration need. Rosedale manufactures industrial filtration products for virtually any industry where liquid and gas flows are present.

We have a vast product line that suits many needs, as well as the flexibility to customize standard products. Our sales staff has knowledge of many industrial practices, giving customers the confidence that their filter solution is the best available for their specific need. Our most popular products are bag filters, pleated cartridge filters, and basket strainers.

Speak with a product representative today. 800.821.5373.
For product details please visit RosedaleProducts.com.

We're committed to your vision with in-stock and made-to-order designs.

Single Bag Housings

Multi-Bag Housings

Polypropylene Housings

Indicating Filter

Centrifugal Separators

Backwashing Systems

Coolant Filter Systems

High Capacity Elements

Filter Bags

Contact us today for more information.
800.821.5373
RosedaleProducts.com

ROSEDALE® PRODUCTS INC.

Separation, Filtration, & Purification Technology.™

Rosedale Products Inc.
3730 W. Liberty Rd. Ann Arbor, MI 48103
Email: Filters@RosedaleProducts.com
Phone: 734.665.8201 • Fax: 734.665.2214
©2025 Rosedale Products Inc.