FILTRATION SPECIFICATIONS

Filter: Model 8 Basket Strainers and Bag Filters

Model 8 strainer/filter housings are made in 2 sizes and 2 pressure ratings, and can serve as basket strainers (for particle retention down to 74 micron size) or as bag filters (for particle retention down to 1 micron size).

FEATURES

- Low pressure drops
- Permanently piped housings
- Covers are o-ring sealed
- Carbon steel, 304 or 316 stainless steel construction
- All housings are electropolished to resist adhesion of dirt and scale
- Adjustable-height legs
- Large-area, heavy-duty baskets
- O-ring seals: Buna N, EPR, Fluoroelastomer, PTFE
- Two pressure ratings: 150 and 300
- Pipe sizes 2-inch to 4-inch, NPT or flanged
- Two basket depths: 15 or 30 inches (nominal)
- ASME code stamp available

OPTIONS

- Duplex Units Available
- Special Alloys
- Sanitary Construction
- Different Outlet Connections
- Higher Pressure Ratings
- Extra-Length Legs
- Heat Jacketing
- Liquid Displacers for Easier Servicing
- NSF 61 Certified

OPERATION

Unfiltered liquid enters the housing above the bag or basket and flows through. Solids are contained inside the bag or basket, where they are easily removed when the unit is serviced. A basket bail is pushed down by the closed cover to hold the basket against a positive stop in the housing. A radial seal prevents bypass of unfiltered liquid.

FILTRATION SPECIFICATIONS

Filter: Model 8 Basket Strainers and Bag Filters

PRESSURE DROP DATA

Basket strainers and bag filters are usually selected so that the pressure drop does not exceed 2 psi when they are clean. Higher pressure drops may be tolerated when contaminant loading is low. Bag change-out should occur at 15 psid.

The pressure drop data is determined by the steps below:

FOLLOW THESE EASY STEPS:

1. Using the desired pipe size and approximate flow rate, determine the pressure drop from the appropriate graph.
2. Multiply the pressure drop obtained in step 1 by the viscosity correction factor found in the accompanying table. This is the adjusted pressure drop for all baskets, without filter bags.
3. Add the pressure drop for the bag filter housing.

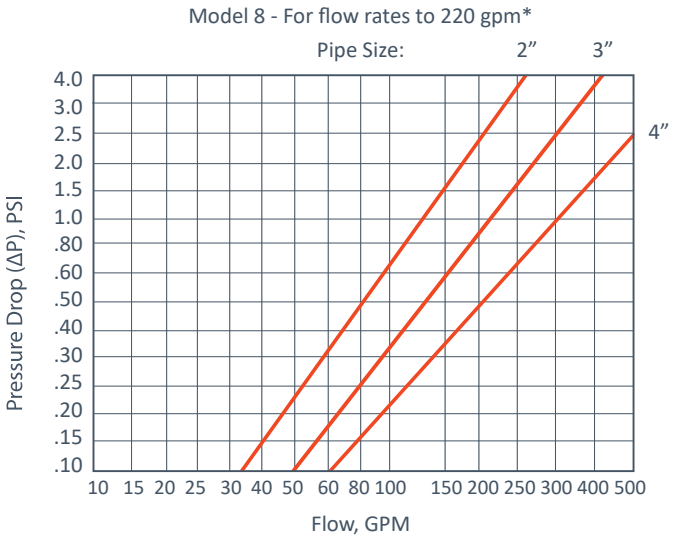

*Based on housing only. Fluid viscosity, bag filter used, and expected dirt loading should be considered when sizing a filter.

Eyenut covers with filter bag or basket.

Filter bags are specified and sold separately.

	VISCOSITY, CPS								
BAG STYLE	1 (H_2O)	50	100	200	400	600	800	1000	2000
ALL UNLINED BASKETS	.65	.85	1.00	1.10	1.20	1.40	1.50	1.60	1.80
40-MESH LINED	.73	.95	1.20	1.40	1.50	1.80	1.90	2.00	2.30
60-MESH LINED	.77	1.00	1.30	1.60	1.70	2.10	2.20	2.30	2.80
80-MESH LINED	.93	1.20	1.50	1.90	2.10	2.40	2.60	2.80	3.50
100-MESH LINED	1.00	1.30	1.60	2.20	2.40	2.70	3.00	3.30	4.40
200-MESH LINED	1.30	1.70	2.10	3.00	3.40	3.80	4.40	5.00	6.80

Model 8 - Dimensions

COVER TYPE

Eyenut Cover
150 PSIG - 3 Bolt Design

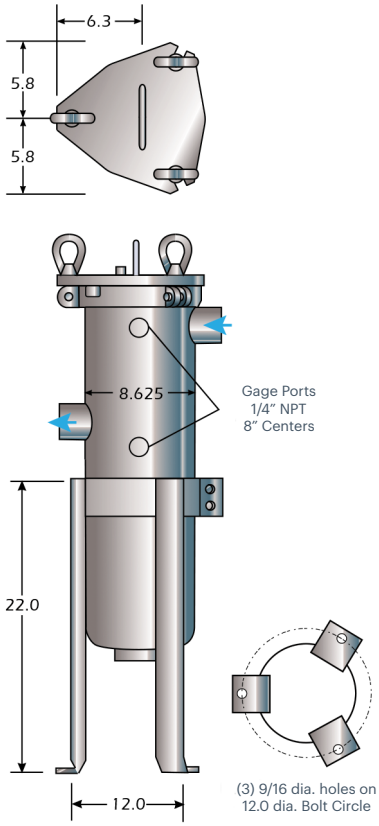

A clearance distance equal to the basket depth must be available above the housing for basket removal.

OUTLET STYLES

Threaded NPT or
Flanged Connections

STYLE 1

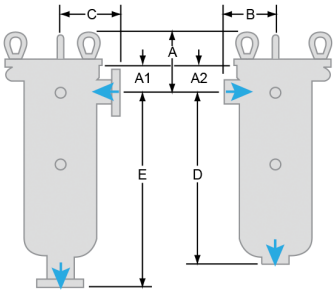

STYLE 2

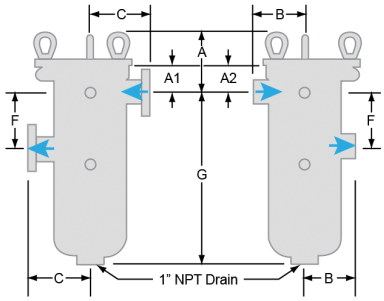

STYLE 3

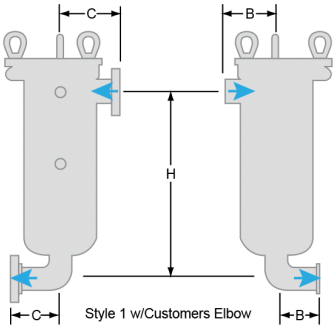

STYLE 4

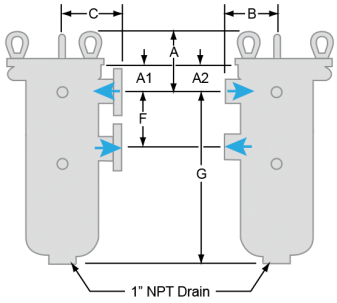

STYLE D

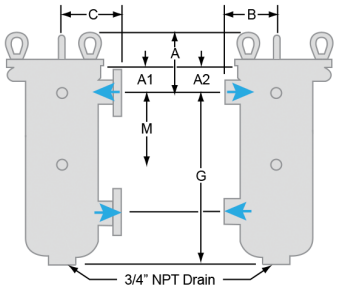

Dimensions (IN) 150 PSIG Design

Model	Pipe Size	A	A1	A2	B	C	D	E	F	G	H	I	J	K	L	M
8-15	2	9.1	5.4	2.9	5.9	7.5	20.6	23.4	8.0	20.9	22.8	3.25	5.0	4.06	4.25	N/A
	3	9.1	5.4	3.7	6.8	7.5	21.3	23.4	8.0	20.9	24.3	3.25	7.25	6.12	4.25	N/A
	4	9.1	5.4	5.0	6.8	8.6	21.3	23.9	8.0	20.9	25.6	3.25	9.0	7.75	4.25	N/A
8-30	2	9.1	5.4	2.9	5.9	7.5	35.6	38.4	8.0	35.9	37.8	3.25	5.0	4.06	4.25	15.0
	3	9.1	5.4	3.7	6.8	7.5	36.3	38.4	8.0	35.9	39.3	3.25	7.25	6.12	4.25	17.0
	4	9.1	5.4	5.0	6.8	8.6	36.3	38.9	8.0	35.9	40.6	3.25	9.0	7.75	4.25	18.0

Dimensions are for reference only and should not be used for hard plumbing. Request a drawing from filters@rosedaleproducts.com

Model 8 - Dimensions

COVER TYPE

Eyenut Cover
300 PSIG - 6 Bolt Design

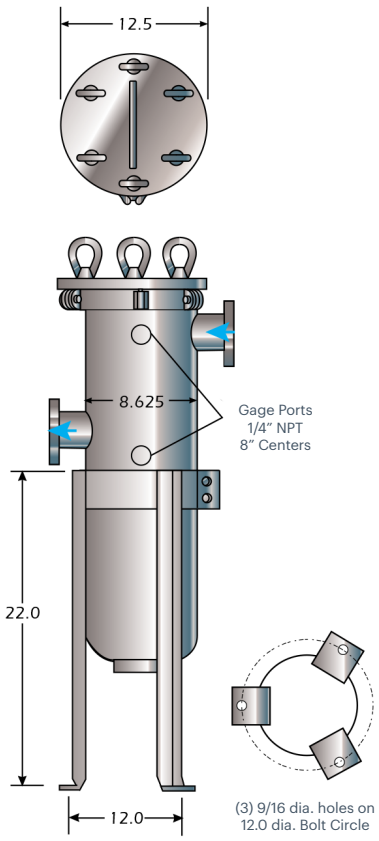

A clearance distance equal to the basket depth must be available above the housing for basket removal.

OUTLET STYLES

Threaded NPT or
Flanged Connections

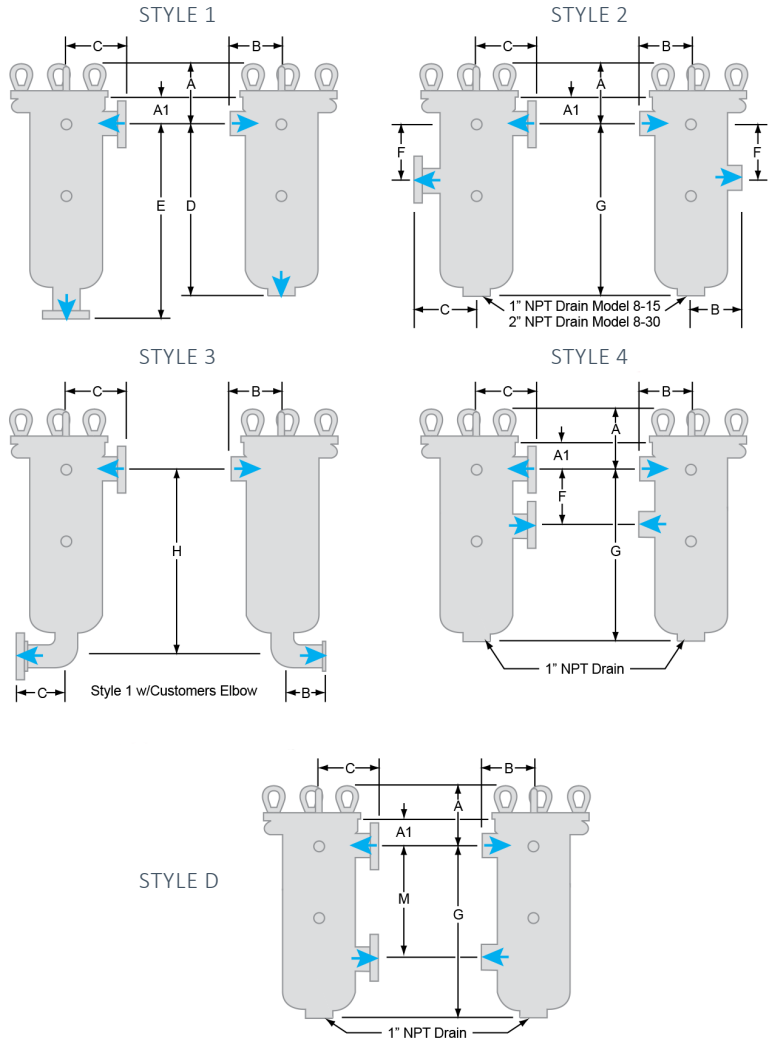

Dimensions (IN) 300 PSIG Design

Model	Pipe Size	A	A1	B	C	D	E	F	G	H	I	J	K	L	M
8-15	2	9.25	5.4	5.9	7.5	20.6	23.4	8.0	20.9	22.8	3.25	5.0	4.06	4.25	N/A
	3	9.25	5.4	6.8	7.5	21.3	23.4	8.0	20.9	24.3	3.25	7.25	6.12	4.25	N/A
	4	9.25	5.4	6.8	8.6	21.3	23.9	8.0	20.9	25.6	3.25	9.0	7.75	4.25	N/A
8-30	2	9.25	5.4	5.9	7.5	35.6	38.4	8.0	35.9	37.8	3.25	5.0	4.06	4.25	15.0
	3	9.25	5.4	6.8	7.5	36.3	38.4	8.0	35.9	39.3	3.25	7.25	6.12	4.25	17.0
	4	9.25	5.4	6.8	8.6	36.3	38.9	8.0	35.9	40.6	3.25	9.0	7.75	4.25	18.0

Dimensions are for reference only and should not be used for hard plumbing. Request a drawing from filters@rosedaleproducts.com

Model 8 Housing Code - How to Order

CONFIGURE YOUR PART NUMBER (EXAMPLE: 8-30-3P-1-300-C-B-S-M20-D-C-NSF)

A	B	C	D	E	F	G	H	I	J	K	L	M
MODEL NUMBER	HOUSING SIZE	PIPE SIZE	OUTLET STYLE	PRESSURE RATING	HOUSING MATERIAL	COVER SEAL	BASKET SEAL	BASKET TYPE	BASKET, MEDIA SIZE	DISPLACER	ASME CODE STAMP	NSF 61 CERTIFIED

A	MODEL NUMBER	CODE
	EYENUT COVER	8

B	HOUSING SIZE	CODE
	15 INCH	15
	30 INCH	30

C	PIPE SIZE, NPT AND FLANGED[1]	CODE
	2-IN NPT OR FLANGE	2P / 2F
	3-IN NPT OR FLANGE	3P / 3F
	4-IN FLANGE	4F

D	OUTLET STYLE	CODE
	BOTTOM	1
	SIDE HIGH	2
	BOTTOM ELBOW	3
	SAME SIDE HIGH	4
	SAME SIDE LOW	D

E	PRESSURE RATING[1]	CODE
	150 PSI	150
	300 PSI	300

F	HOUSING MATERIAL	CODE
	CARBON STEEL	C
	304 STAINLESS STEEL	S
	316 STAINLESS STEEL	S316

G	COVER SEAL	CODE
	BUNA N	B
	ETHYLENE PROPYLENE	E
	FLUOROELASTOMER	V
	FKM/FEP	TEV
	PTFE (SOLID WHITE) (6 BOLT COVER)	TSW

H	BASKET SEAL	CODE
	SEAL REQUIRED	S

I	BASKET TYPE	CODE
	FILTER BAG BASKET, 9/64 PERFORATIONS[2]	PB
	STRAINER BASKET, PERFORATED METAL	P
	FILTER BAG BASKET, PERFORATED, MESH LINED[2]	BM
	STRAINER BASKET, PERFORATED, MESH LINED	M

J	BASKET, MEDIA SIZE	CODE	
	NO SYMBOL FOR PB BASKET		
		PERF SIZES	MESH SIZES
	PERFORATION DIAMETERS (P BASKETS)	1/4	20
		3/16	40
	MESH SIZES (M AND BM BASKETS)	9/64	60
		3/32	80
		1/16	100

K	DISPLACER	CODE
	DISPLACER	D

L	ASME CODE STAMP	CODE
	CODE STAMP	C

M	NSF 61 CERTIFIED	CODE
	NSF 61	NSF

1. Higher pressure ratings and alternative connections available. Consult factory.
2. Filter bags are specified separately.